TOSHIBA

STEREO CASSETTE DECK

PC-X12, PC-X12B

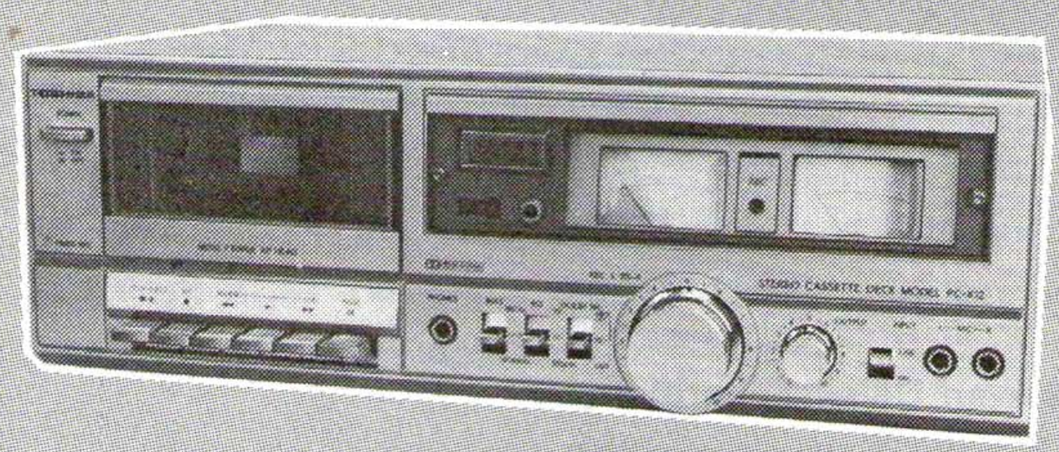

PC-X12

PC-X12B

SPECIFICATIONS

Power supply:	220V AC, 50 Hz (for European Countries except U.K.) 240V AC, 50 Hz (for U.K. and Australia) 120V AC, 60 Hz (for U.S.A. and Canada) 115V/230V AC, 50/60 Hz (for Southeast Asia, South America and Middle East)
Power consumption:	12W
Track system:	4-track 2-channel stereo
Recording/Erasure:	AC bias (85 kHz), AC erasure
Heads:	Super AP head, and 4 gap AF erase head
Motor:	DC servo-motor
Tape speed:	4.8 cm/sec.
Fast forward/Rewind time:	Approx. 90 sec. (C-60)
Semiconductors:	4 ICs, 17 transistors, 6 diodes
Wow & flutter:	0.06% (WTD RMS)
S/N Ratio:	60 dB with metal tape 58 dB with chrome position tape (Line, peak, WTD)
Dolby NR:	Noise level improved by 5 dB at 1 kHz, and by 10 dB at 5 kHz
Frequency response:	30 Hz – 12.5 kHz for metal tapes at 0 dB 30 Hz – 8 kHz for chrome position tapes at 0 dB 30 Hz – 18 kHz for metal tapes at –20 dB 30 Hz – 16 kHz for chrome position tape at –20 dB 30 Hz – 15 kHz for normal tapes at –20 dB
Input jacks:	MIC: 0.25mV (600 ohm – 10K ohm) LINE: 70mV (50K ohm min.)
Output jacks:	LINE: 0.4V (50K ohm) HEADPHONES: 0.2mW (8 ohm)
Main dimensions:	420(W) x 142(H) x 272(D) mm (including rubber feet and front panel controls)
Weight:	4.3 kg
Accessories:	Connection cords ..... 2 Head cleaning swab 1

Specifications are subject to change without notice.

TE, TU, AY, TA, TC, VF

www.hifiengine.cor

CONTENTS

1. FEATURES 2
2. OPERATING CONTROLS . . . . . 3 to 4
3. BLOCK DIAGRAM 4
4. DISASSEMBLY INSTRUCTIONS . . . . . 5 to 6
5. ADJUSTMENTS . . . . . 7 to 8
6. P.C. BOARD PARTS LOCATIONS 9
7. SCHEMATIC DIAGRAM 10
8. MECHANICAL PARTS LOCATIONS 11
9. CABINET PARTS LOCATIONS 12
10. PARTS LIST . . . . . 13 to 16

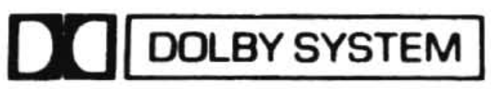

* Noise Reduction System is manufactured under license from Dolby Laboratories. "DOLBY" and the Double-D symbol are Trademarks of Dolby Laboratories Inc.

1. FEATURES

- **Metal tape**

The PC-X12/X12B is specially equipped with the super AP (super hard permalloy) head, featuring higher maximum magnetic density and improved linearity, and a high-efficiency 4 gap AF (ferrite) erase head. With these high-performance heads, the PC-X12/X12B has been designed to make the most of the latest extra-high-quality metal tapes. Both tape heads are very hard and resistant to wear, thus giving extended life.

- Independent 3-position bias and equalization selectors.
- Timer recording, and "morning alarm" playback.

When connected to an audio timer (optional), the PC-X12/X12B can make timer recordings and timer playback (for morning alarm with your own selected music).

- Dolby NR system
- Soft-eject system
- Review and cueing functions convenient in finding a particular part of a recording.
- One-touch recording
- Metal tape setting indicator
- Output level control
- Input selector switch

www.hifiengine.com

2. OPERATING CONTROLS

(The photographs are ones of PC-X12, European Model)

FRONT VIEW

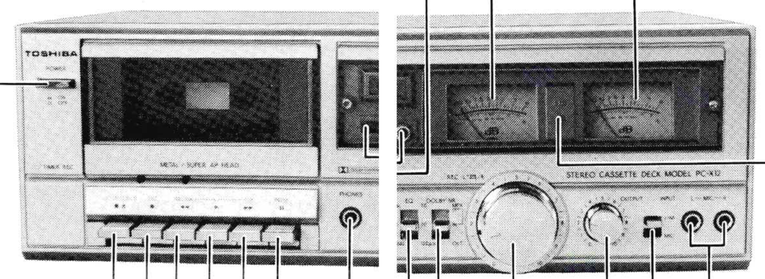

[METAL]
Metal Tape Position Indicator Lamp
Lights when both the [BIAS] and [EQ] tape selectors are set to the < METAL > positions.

[POWER] Switch
When the POWER switch is pressed < ON >, the level meters light to indicate that the tape deck is ready for use.

[■▲STOP/EJECT]
STOP/EJECT Key
All keys except the [❚❚] PAUSE key are reset and the tape stops when this key is pressed. Pressing this key again opens the cassette compartment.

[● REC] One-Touch Record Key
Press this key to start recording. The [▶] Play key will shift automatically at the same time.

[◀◀] Rewind Key
[REVIEW]
Press this key to rewind the tape.
When this key is pressed during playback, the tape is rewound until the key is released (review operation).

[▶] Play Key

[▶▶] Fast-Forward Key
[CUE]
Press this key to advance the tape rapidly.
When this key is depressed during playback, the tape is advanced rapidly until the key is released, making it easy to find a particular piece of music.

[❚❚PAUSE] Key
To halt tape transport temporarily during either recording or playback, press this key. To start again in the same mode, simply press the PAUSE key again.

[PHONES] Headphones Jack
Plug a pair of headphones (8 ohm impedance, 6.3mm diameter plug) into this jack for private headphone listening.

[TAPE COUNTER] Tape Counter
Counter Reset Button
To find recorded parts of a tape, make a note of the tape counter reading when recording. The tape counter can be reset to < 000 > at any time by simply pressing the reset button.

Level Meters
These VU meters show the recording level for recording, and the recorded signal level during playback.

[REC] Recording Indicator Lamp
Lights when the [● REC] key is pressed.

[MIC] Microphone Jacks
Insert microphone plugs into these jacks. < L > indicates left channels and < R > right channels. Use a microphone with a 6.3mm diameter plug (impedance: 600 ohm to 10K ohm).

[INPUT] Input Selector
Switch to < LINE > to allow recording via LINE IN terminals, or to < MIC > for live microphone recordings.

[OUTPUT] Output Level Control
Adjust the level of the output signals from the [LINE OUT] jacks with this control. Note that the headphones listening volume is also adjusted with this control.

[REC]
Recording Level Adjustment Controls
Adjust the recording level for line and microphone inputs with these controls (outer for left channel and inner for right channel).

[DOLBY NR]
Dolby* NR Switch with MPX Filter
To make Dolby recordings of FM stereo broadcasts, switch to the < IN > position. For Dolby recordings of other program sources (records, microphone sound, etc.), switch to the < MPX OFF > position.
During playback of Dolby encoded recordings, the switch may be left in either the < MPX OFF > or < IN > positions. Switch to the < OUT > position to make recording without Dolby NR.

[BIAS] [EQ] Tape Selectors
Set the bias and equalization tape selector switches according to the type of tape being used.

Figure 1.

(The photographs are ones of PC-X12, European Model)

REAR VIEW

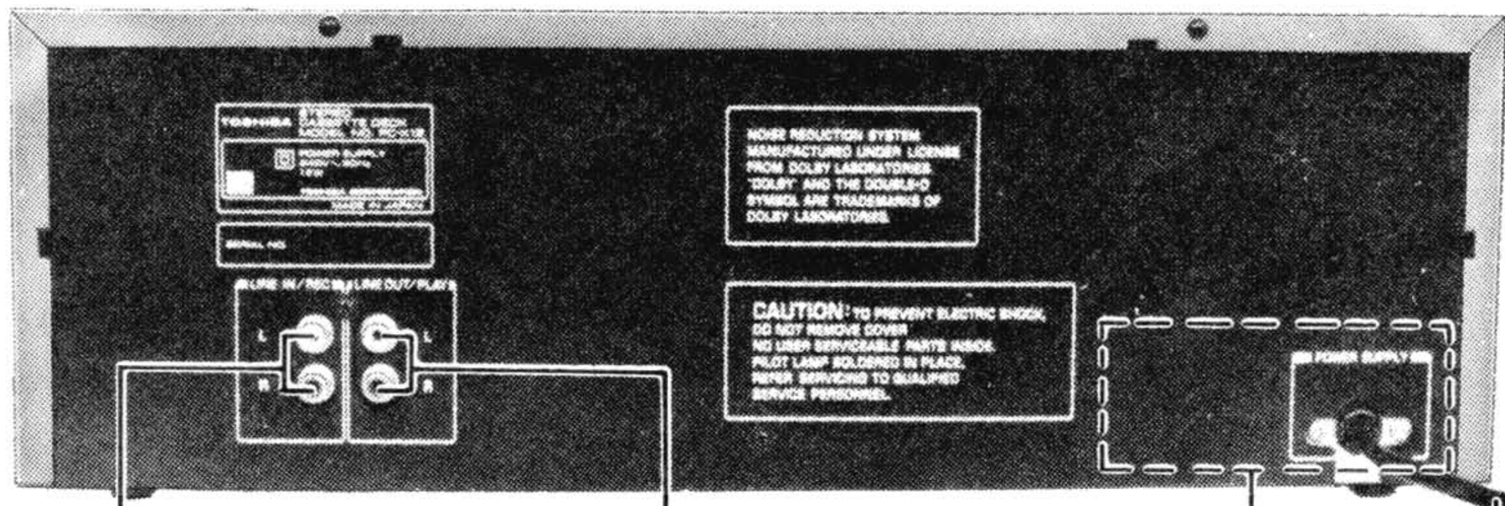

Figure 2.

LINE IN/REC Terminals

Connect these terminals to your amplifier for recording.

LINE OUT/PLAY Terminals

Connect these terminals to your amplifier for playback.

Power Cord

230V Indicating Square Hole

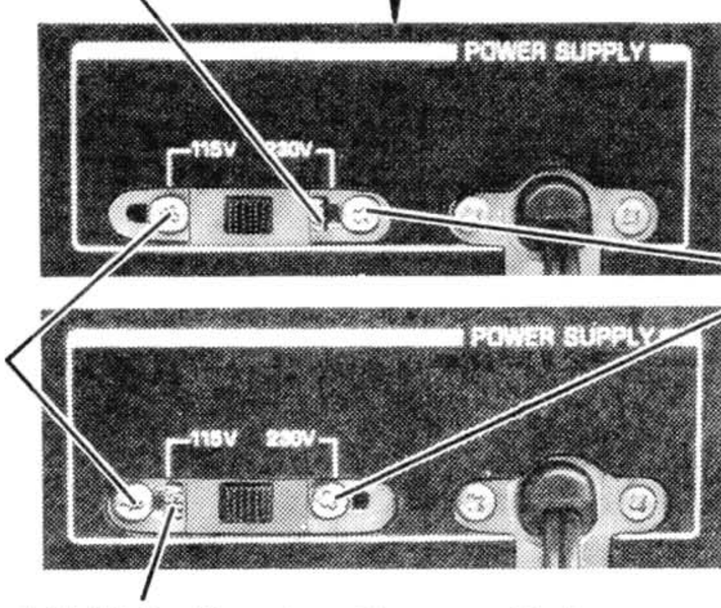

Figure 3.

115V Indicating Square Hole

● VOLTAGE CONVERSION FOR PC-X12-VF

(Models for Southeast Asia, South America and Middle East)

The voltage selector switch must be changed as follows:

1. Loosen two BID screws (A) (344, 3ø x 10mm) to their halves holding the jack plate and the switch (S7). Their tips have been already locked but by exceeding to loosen them, the switch may get out of place. When they become tighter, don't loosen them moreover.
2. Slide the washers and screws (A) to the right or left side by using your finger tips. (In this case, be careful not to injure the jack plate with the washers.)
3. After confirming that the "115V" or "230V" printed on the jack plate indicates same voltage as on the label of the switch through the holes at the each side, tighten the two screws (A). (See figure 3.)

NOTE: Ordinary unit has been already set to the "230V" position.

3. BLOCK DIAGRAM

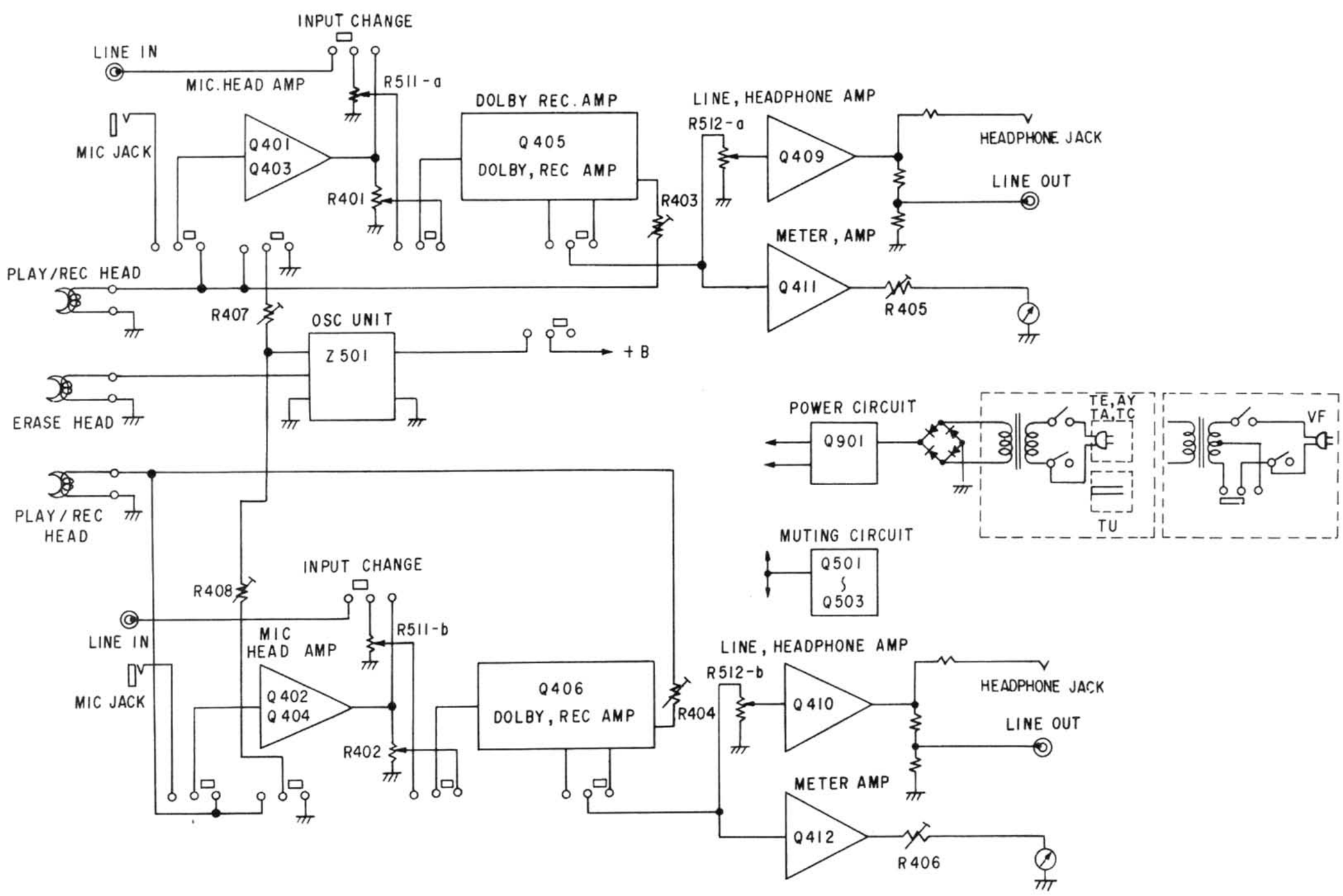

Figure 4.

4. DISASSEMBLY INSTRUCTIONS

TOP COVER REMOVAL

1. Remove 4 screws (A) (3ϕ x 6mm with washer) which secures the top cover from both sides. (See figure 5.)
2. Remove 1 screw (B) (3ϕ x 8mm with washer) and 1 screw (C) (3ϕ x 10mm with washer) which hold the rear jack board. (See figure 6.)
3. Remove the top cover by holding up the front panel after raising the rear of the set.

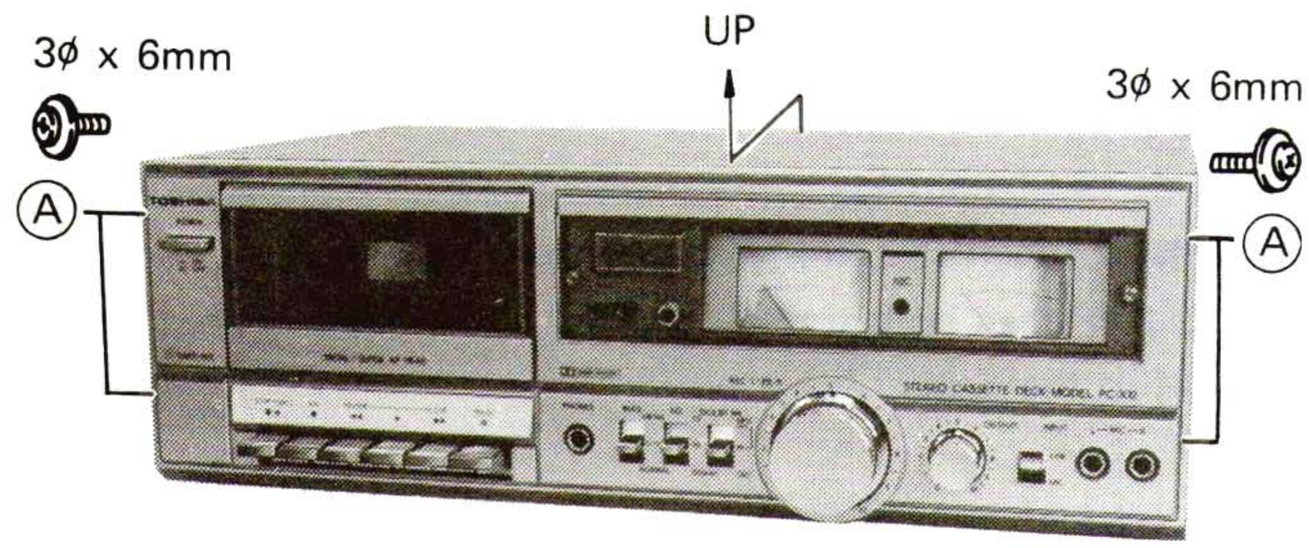

Figure 5.

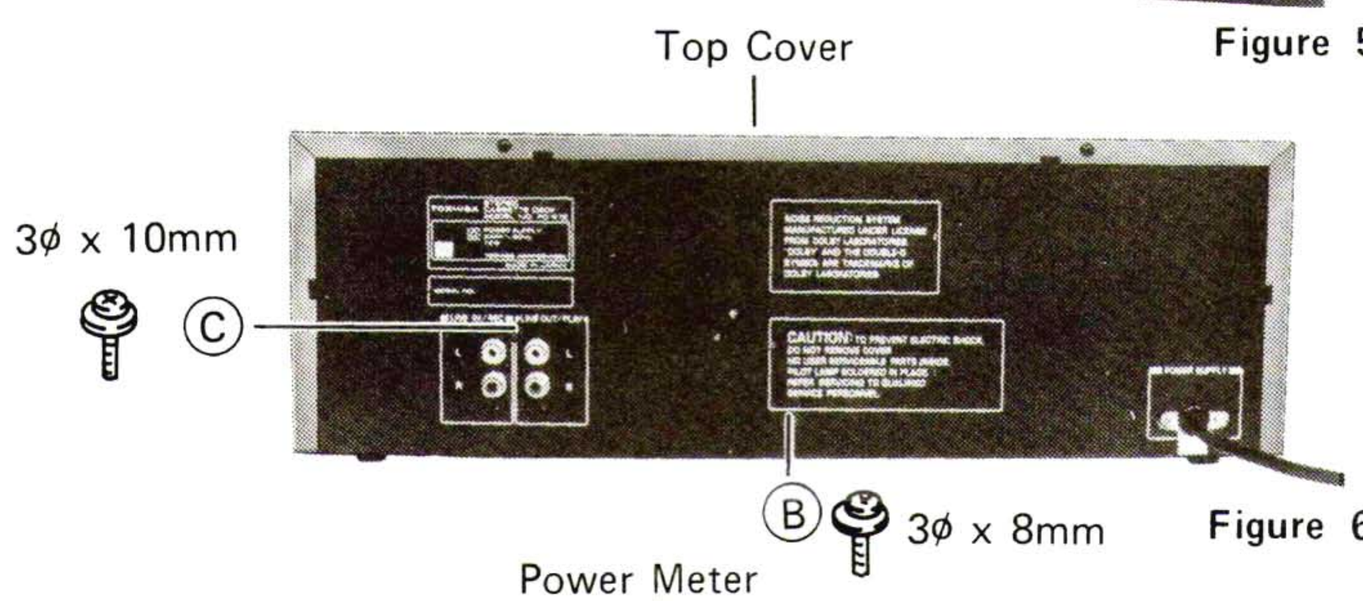

Figure 6.

METER REMOVAL

1. Remove the meter by removing 2 screws (D) (3ϕ x 8mm, Tapping) which secure the panel and meter mounting board. (See figure 7.)

COUNTER REMOVAL

1. Remove the counter by removing 2 screws (E) (3ϕ x 8mm, Tapping) which secure counter mounting board and the panel. (See figure 7.)

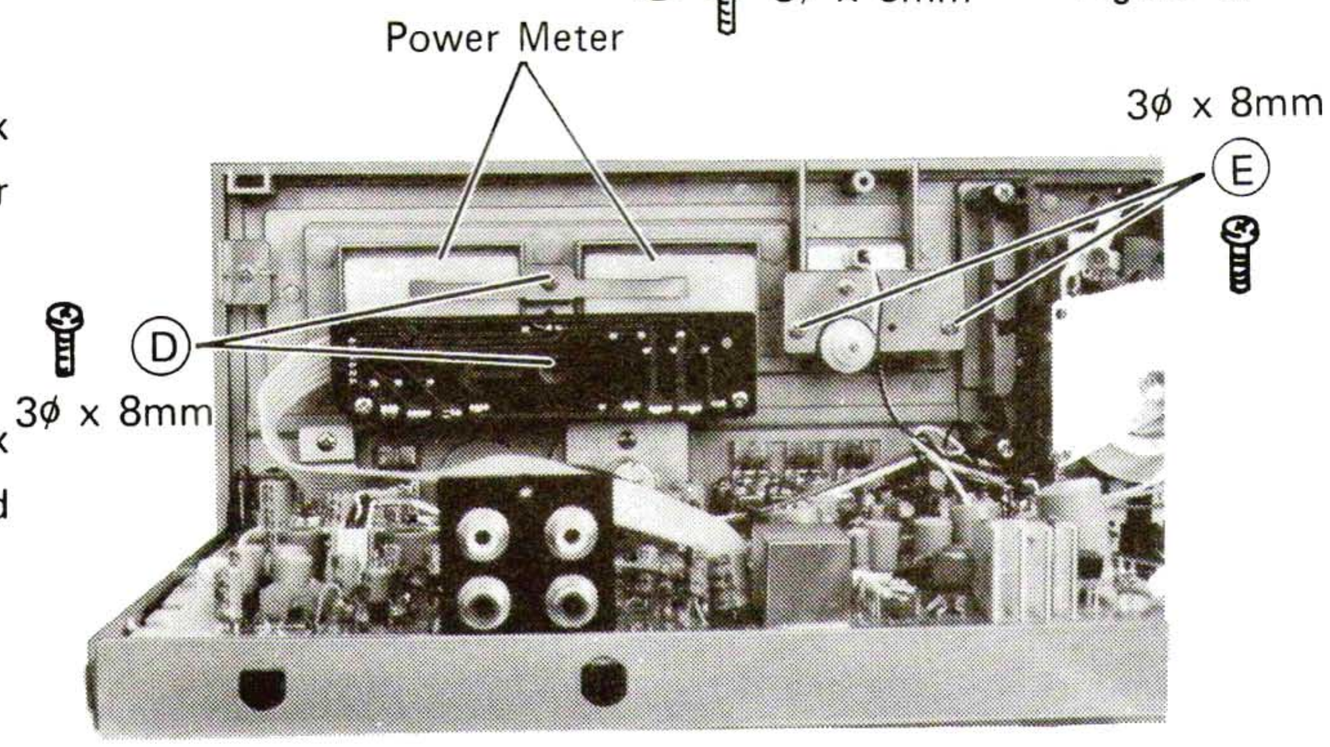

Figure 7.

MECHANISM ASSEMBLY REMOVAL

1. Remove 2 screws (F) (3ϕ x 8mm, Tapping) which hold the power switch board for easy removal of mechanical assembly. (See figure 8.)
2. Remove the spring at the right of the set.
3. Remove the door lever from damper assembly.
4. Remove one screw (G) (2.6ϕ x 8mm) which holds the door lever and the panel. (See figure 9.)
5. Remove the mechanical assembly from the body by removing 4 screws (H) (3ϕ x 25mm, Tapping) which fix the mechanical assembly to the panel. (See figure 8.)

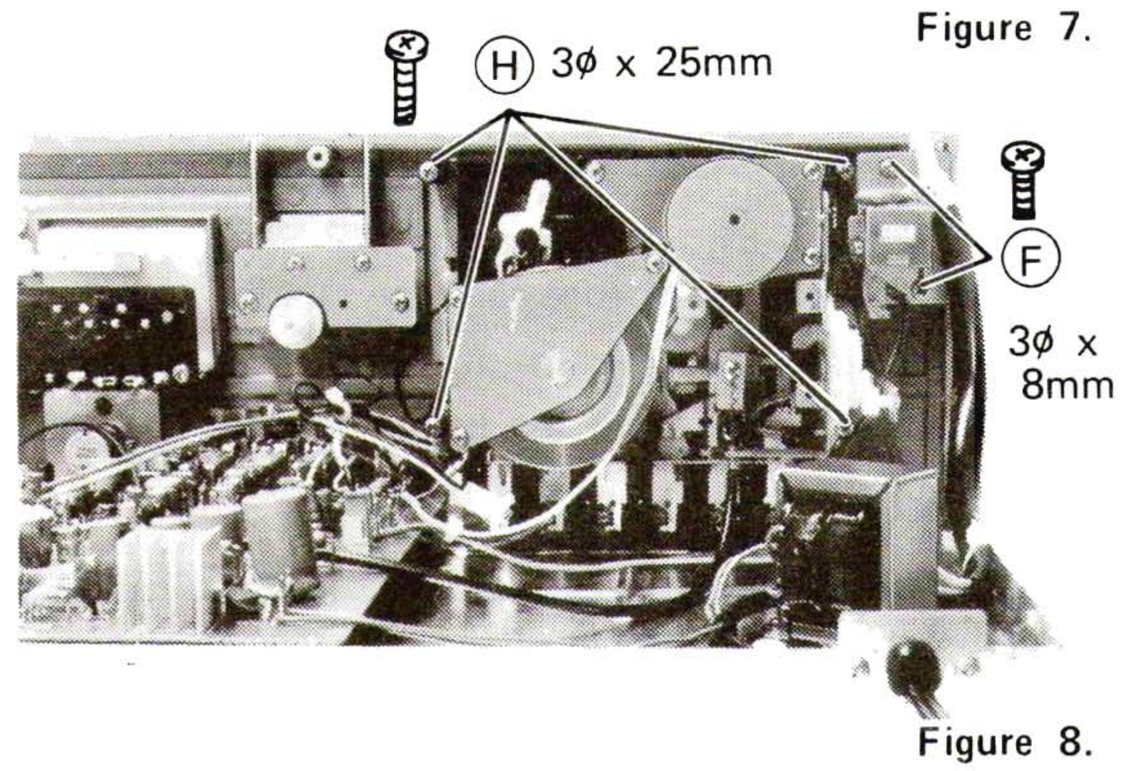

Figure 8.

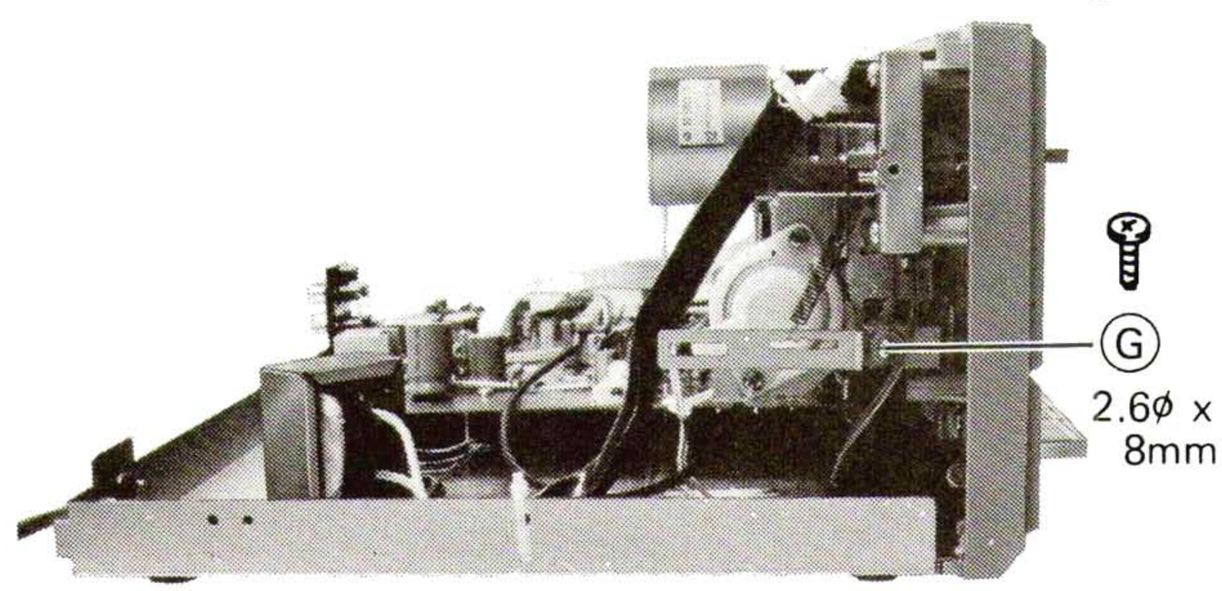

Figure 9.

CASSET COVER REMOVAL

1. Remove the top cover and mechanical assembly.
2. Detach the cassette cover by removing two screws (I) (3ϕ x 8mm, Tapping) which hold the panel and cassette cover. (See figure 10.)

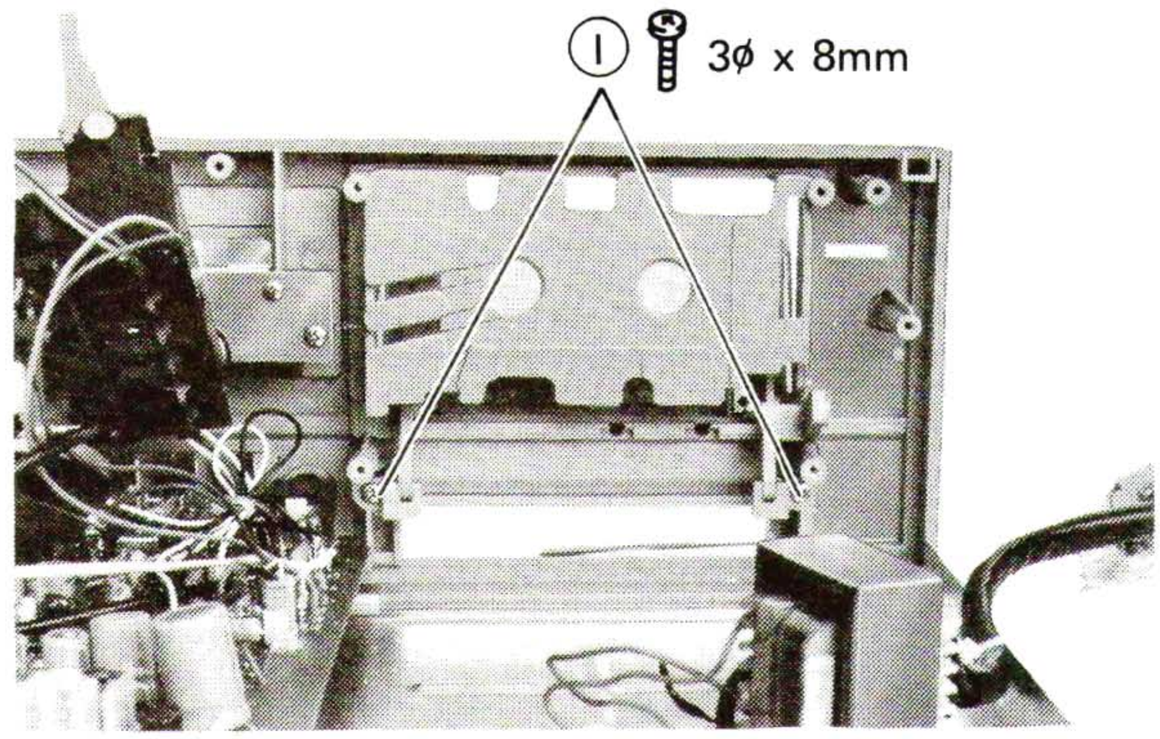

Figure 10.

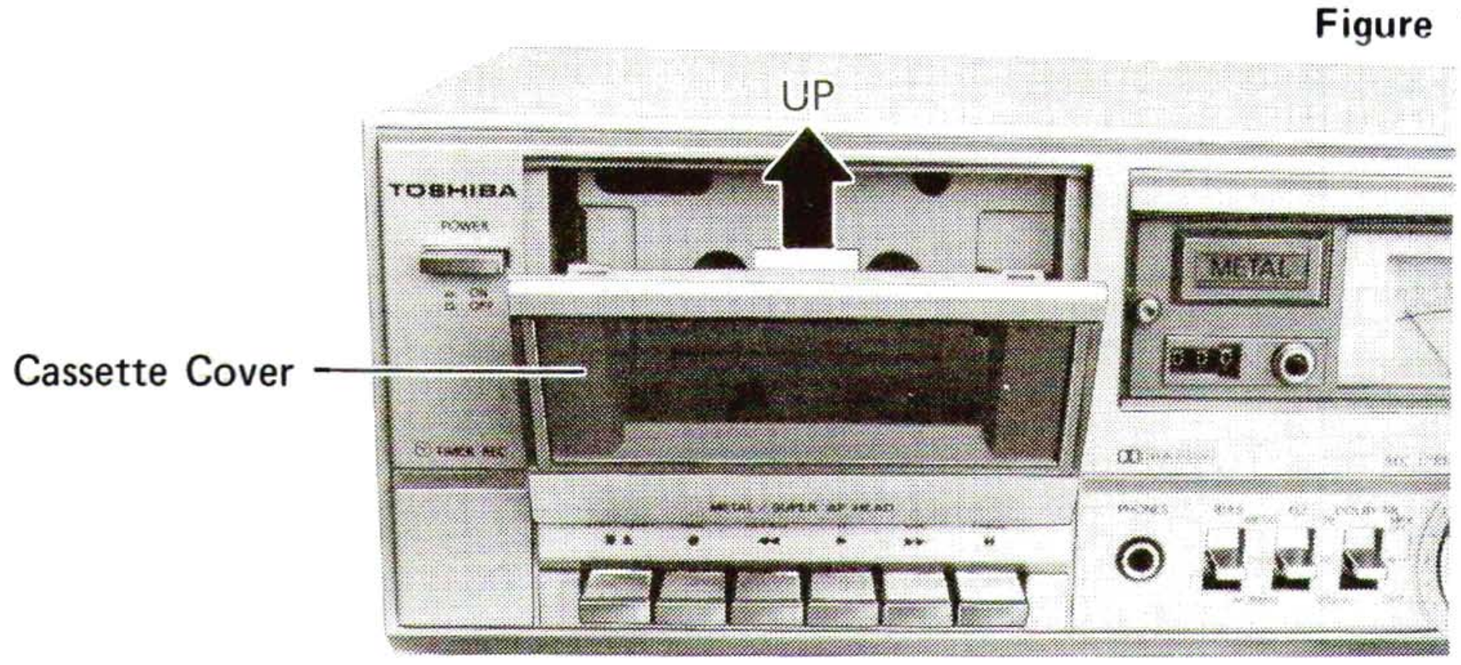

Figure 11.

PANEL ASSEMBLY REMOVAL

1. Remove the meter, counter and mechanical assembly.
2. Remove the 3 Volume knobs (J). (See figure 12.)
3. Remove 3 screws (K) (3ϕ x 6mm) which secure the panel to the bottom board. (See figure 13.)
4. Remove the panel from the body by removing 2 screws (L) (3ϕ x 8mm, Tapping) which secure the mic jack and volume section. (See figure 14.)

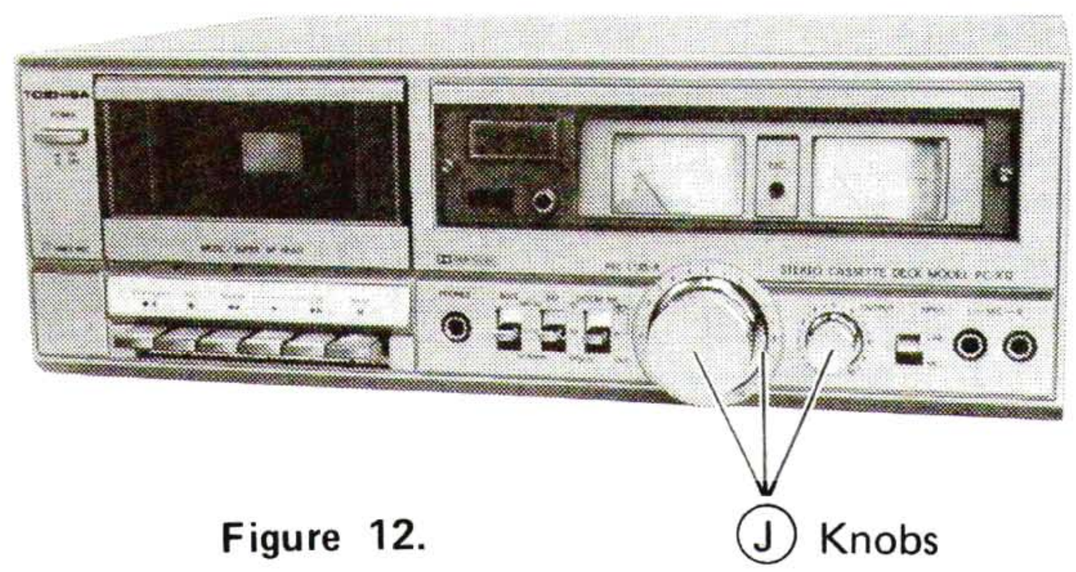

Figure 12.

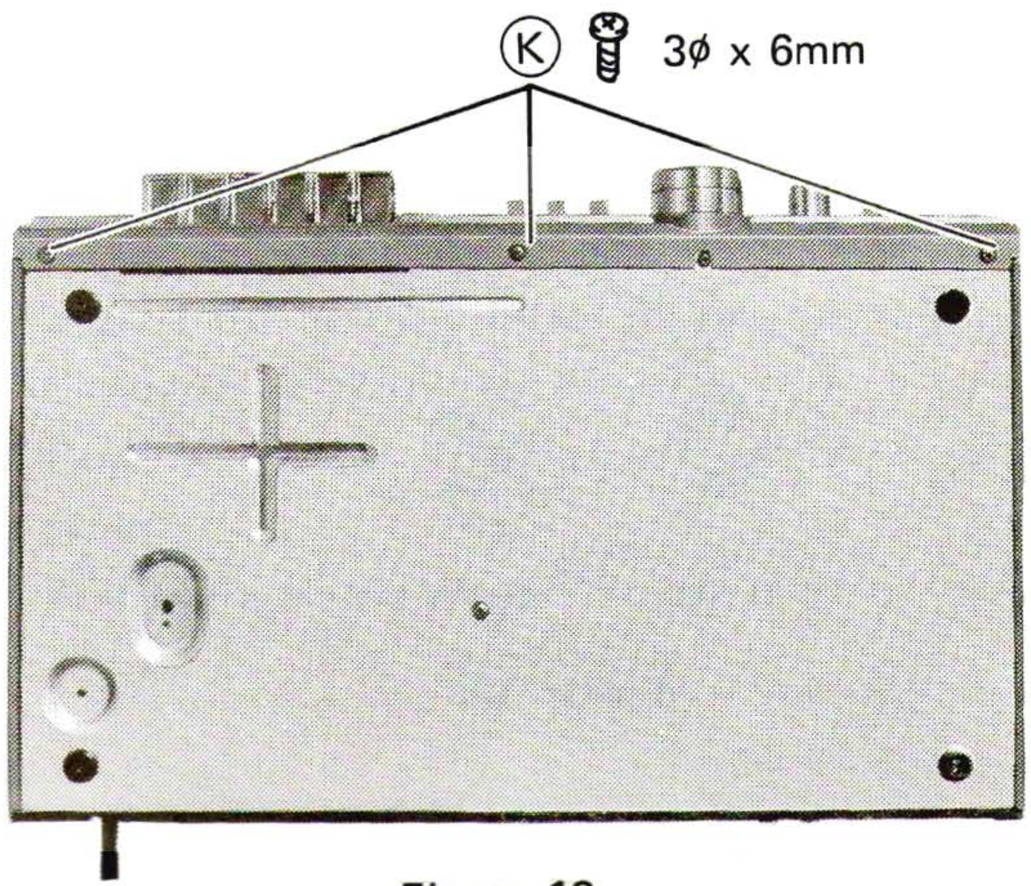

Figure 13.

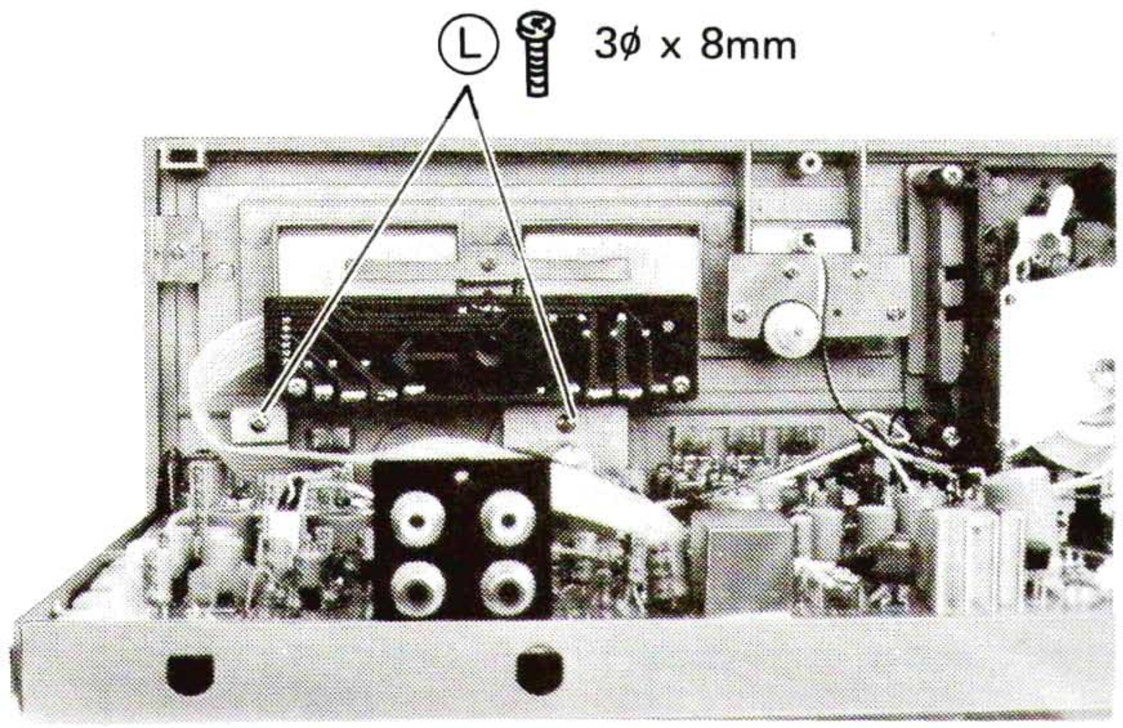

Figure 14.

www.hifiengine.com

5. ADJUSTMENTS

MAIN P.C. BOARD

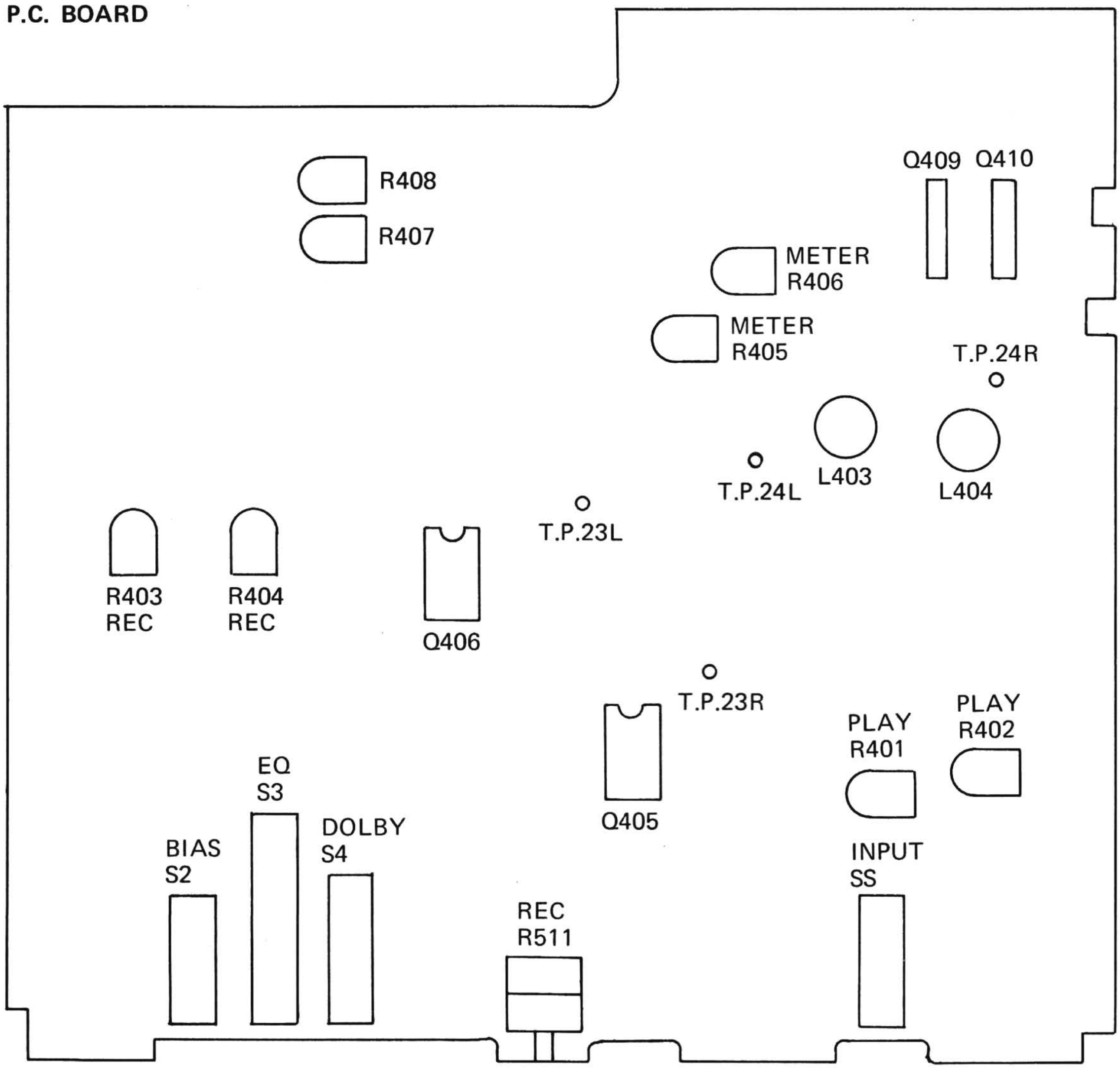

Figure 15.

TEST EQUIPMENTS

1. VTVM (Vacuum Tube Voltmeter)
2. Signal Generator
3. Resistance Attenuator
4. Screwdriver
5. Test Tapes
   MTT-114 (10 kHz)
   MTT-150 (400 Hz)
   AC-511 (CHROME TAPE)

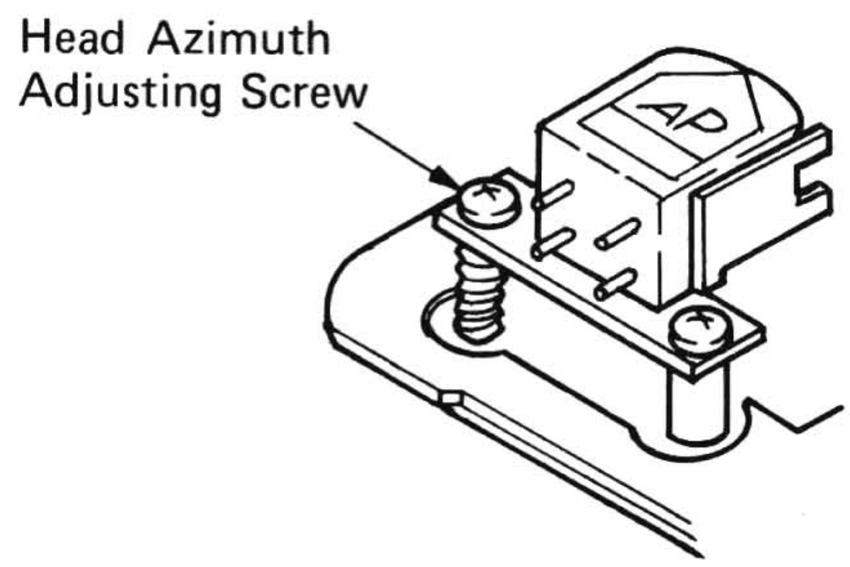

Figure 16.

ADJUSTMENT PROCEDURE

NO.	ITEM	REFERENCE VALUE	TUBE	VOLUME		LEVER SWITCH			ADJUSTMENT	TEST POINT	INPUT FREQUENCY ATT	REMARKS
				REC	OUT	BIAS	EQ	NR				
1	Head Azimuth Adjustment	Maximum	MTT –114	———	MAX	AD (NOR)	AD (NOR)	OUT	Head Azimuth Adjusting Screw	LINE-OUT	———	Lock screw after adjusting and measuring with phase meter or adjust maximum with MTT-144 tape (10 kHz).
2	Tape Speed Measurement	Frequency 3000 ± 30 Hz	MTT –111	———	MAX	AD (NOR)	AD (NOR)	OUT	Semi-fixed Parts Inside the Motor	LINE-OUT	———	Complete rewinding (Adjust to 3000 ± 15 Hz only when frequency is out of reference value.).
3	Playback Sensitivity Adjustment	Test Point 1000mV	MTT –150	———	MAX	AD (NOR)	AD (NOR)	OUT	R401 R402	TP23L TP23R	———	Playback 400 Hz tape and adjust to 100mV at test point.
4	Playback Output Measurement	600mV ± 3 dB	MTT –150	———	MAX	AD (NOR)	AD (NOR)	OUT	———	LINE-OUT	———	Read the LINE-OUT voltage when adjusting to TP 100mV with 400 Hz tape.
5	Record/Playback Frequency Characteristics (normal)	± 2 dB	MTT 215C	———	MAX	AD (NOR)	AD (NOR)	OUT	———	LINE-OUT	———	Read the difference between 315 Hz and 10 kHz.
6	Noise Output Level	3.5mV or less	No Load	———	MAX	AD (NOR)	AD (NOR)	OUT	———	LINE-OUT	———	Eliminate temporary peak. Read maximum value of mean deffection.
7	Bias Leak Adjustment	Minimum	———	———	MAX	AX CrO_2	AX CrO_2	OUT	L403 L404	TP24L TP24R	———	
8	Line Input Adjustment	Test Point 100mV	———	Adjustment	MAX	AX CrO_2	AX CrO_2	OUT	REC-VRL REC-VRL	TP23L TP23R	400 Hz –17 dB	Adjust REVR so that output at testpoint is 100mV. Never proceed more.
9	Meter Adjustment	Meter + 3 dB	———	Adjustment	MAX	AX CrO_2	AX CrO_2	OUT	R405 R406	Meter	400 Hz –17 dB	Adjust so that the pointer of the meter is set to +3.
10	Record/Playback Frequency Characteristics Adjustment	0 ± 1 dB	NEW-SA AC-502	Adjustment	MAX	AX CrO_2	AX CrO_2	OUT	R407 R408	LINE-OUT	400 Hz –10 kHz	Adjust bias so that 10 kHz gets within ± 1 dB for 400 Hz.
11	Record/Playback Sensitivity Adjustment	0 ± 1 dB	NEW-SA AC-502	Adjustment	MAX	AX CrO_2	AX CrO_2	OUT	R403 R404	LINE-OUT	400 Hz –17 dB	Output level should be kept within ± 1 dB as compared with input level when playing back or recording at 400 Hz ± 3 dB.

Measurement Conditions: • Input: 0 dB = 1 Vrms • LINE OUT: Load Impedance: 47K ohm • LINE IN: Impedance: 600 ohm • Test Point Impedance: No load

ERASE HEAD HEIGHT ADJUSTMENT

1. Temporally mount the erase head so that it will be even by eye measurement.
2. Set in PLAY position with setting a mirror cassette tape, MC-09C.
3. Adjust the height adjusting screw so that the upper edge of the tape will touch at the upper tape guide of the erase head. See figure 18.
4. Confirm whether the upper edge of the tape is not curled.
5. Paint the adjusting screw with lock paint.

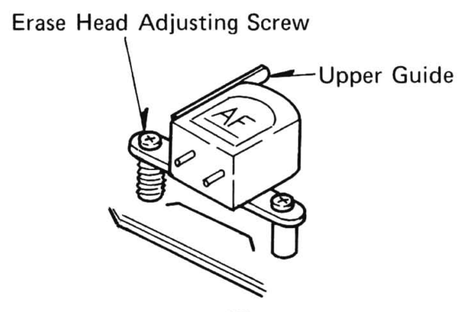

Figure 17.

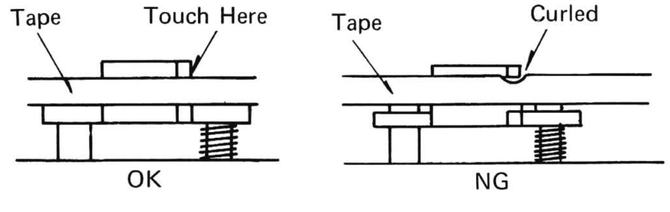

Figure 18.

P.S. When the mirror cassette is not available, please remodel a normal tape, type C-90 as shown below. See figure 19.

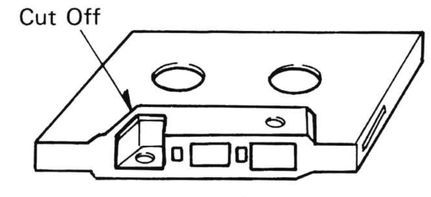

C-90

Figure 19.

6. P.C. BOARD PARTS LOCATIONS

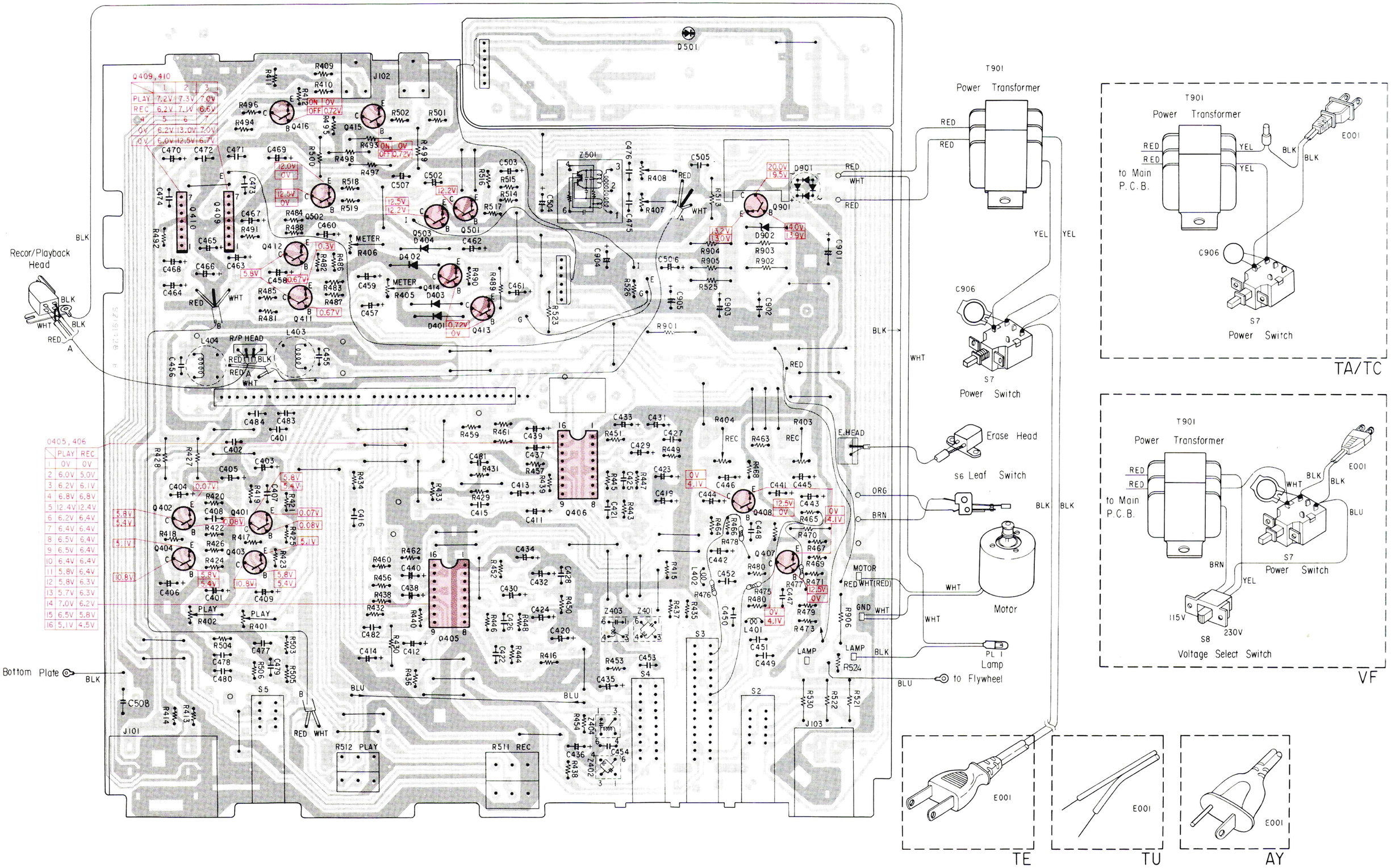

Figure 20.

7. SCHEMATIC DIAGRAM

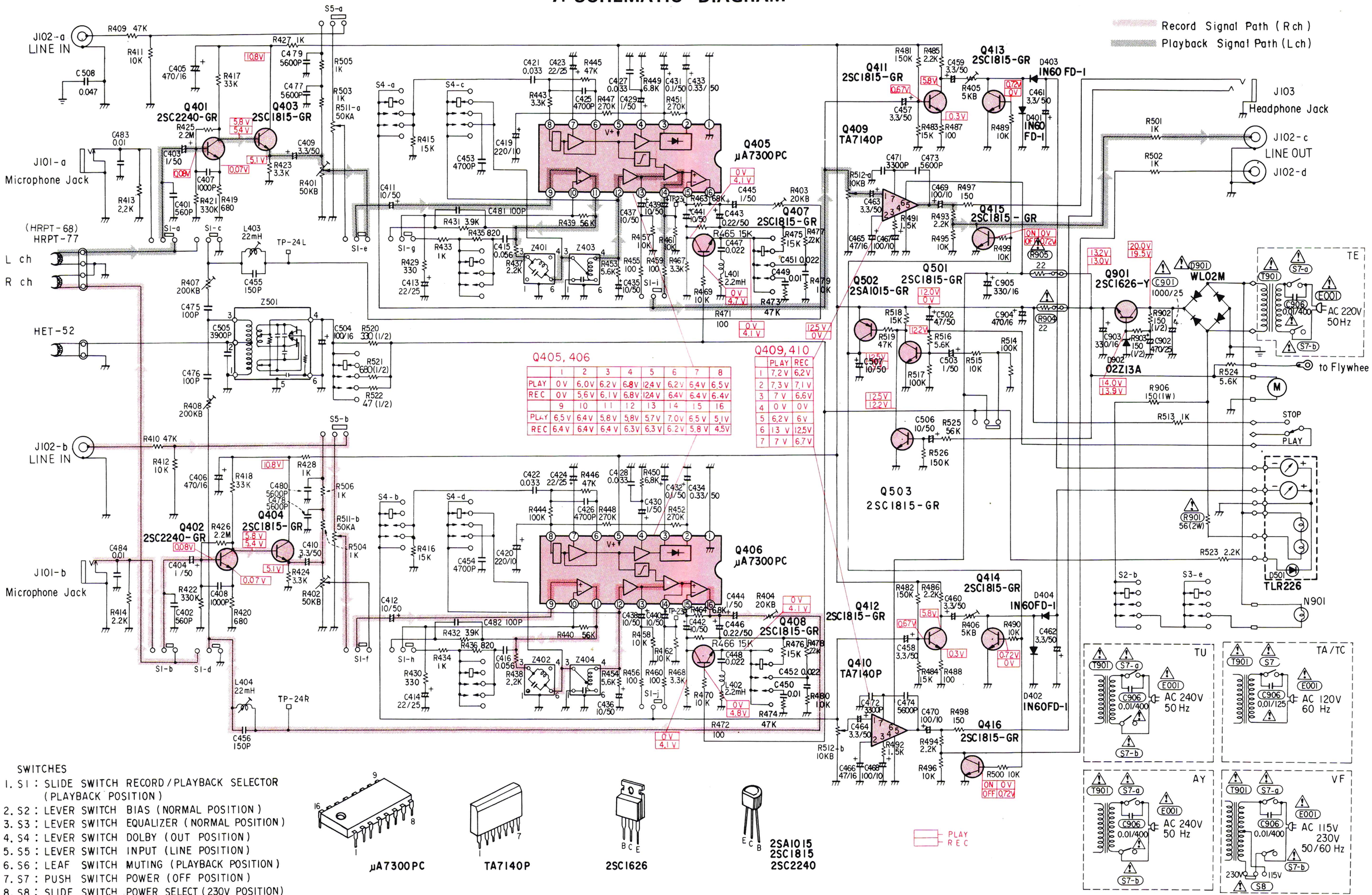

SWITCHES

1. S1 : SLIDE SWITCH RECORD/PLAYBACK SELECTOR (PLAYBACK POSITION)
2. S2 : LEVER SWITCH BIAS (NORMAL POSITION)
3. S3 : LEVER SWITCH EQUALIZER (NORMAL POSITION)
4. S4 : LEVER SWITCH DOLBY (OUT POSITION)
5. S5 : LEVER SWITCH INPUT (LINE POSITION)
6. S6 : LEAF SWITCH MUTING (PLAYBACK POSITION)
7. S7 : PUSH SWITCH POWER (OFF POSITION)
8. S8 : SLIDE SWITCH POWER SELECT (230V POSITION)

Figure 21.

CAUTION: The ⚠ mark, the symbol No. circled with rectangle in the schematic diagram and the shaded area in the parts list designate components which have special characteristics important for safety and should be replaced only with types identical to those in the original circuit or specified in the parts list.

8. MECHANICAL PARTS LOCATIONS

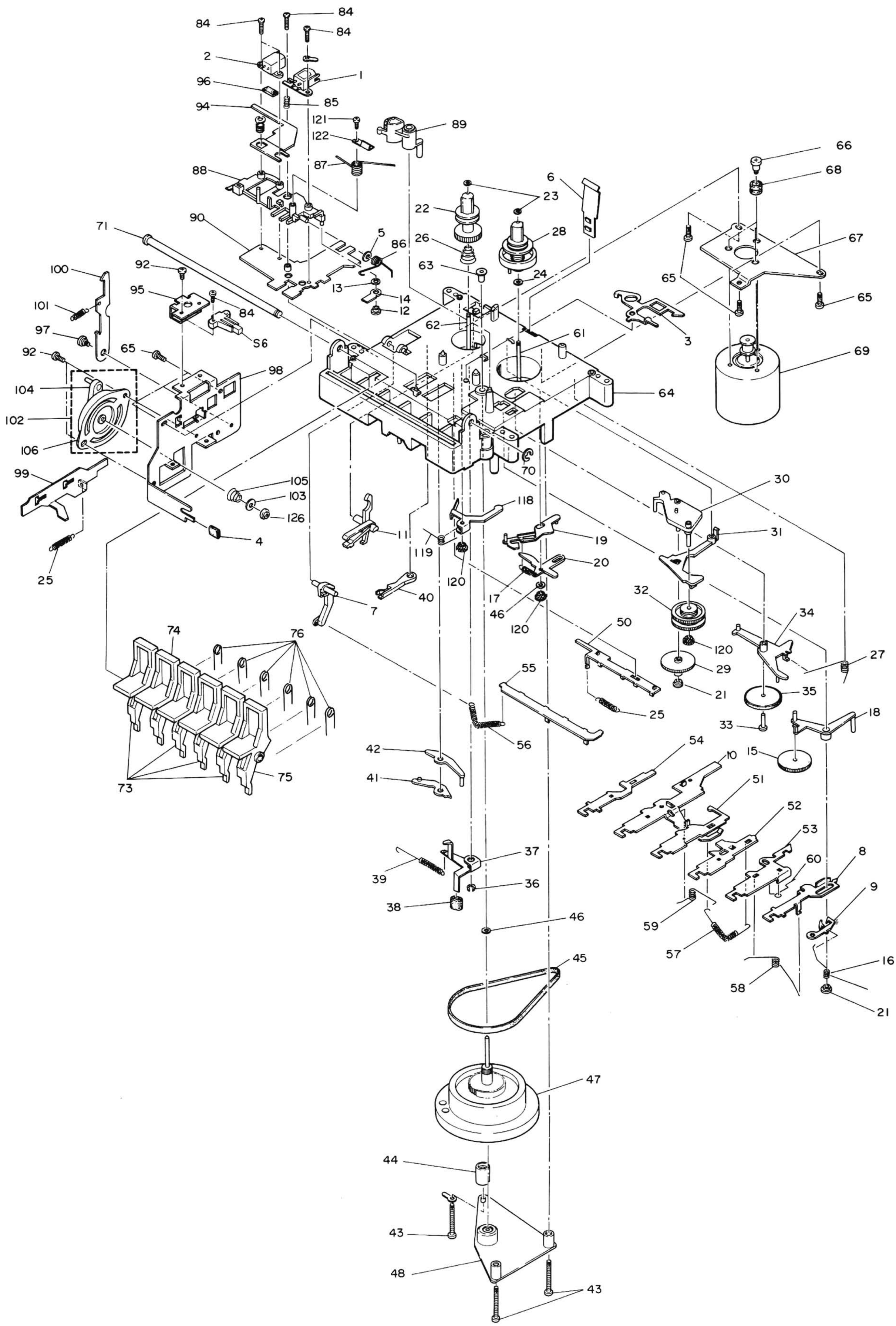

NOTE: Excluded parts in the Parts List are not available as replacement parts.

Figure 22.

9. CABINET PARTS LOCATIONS

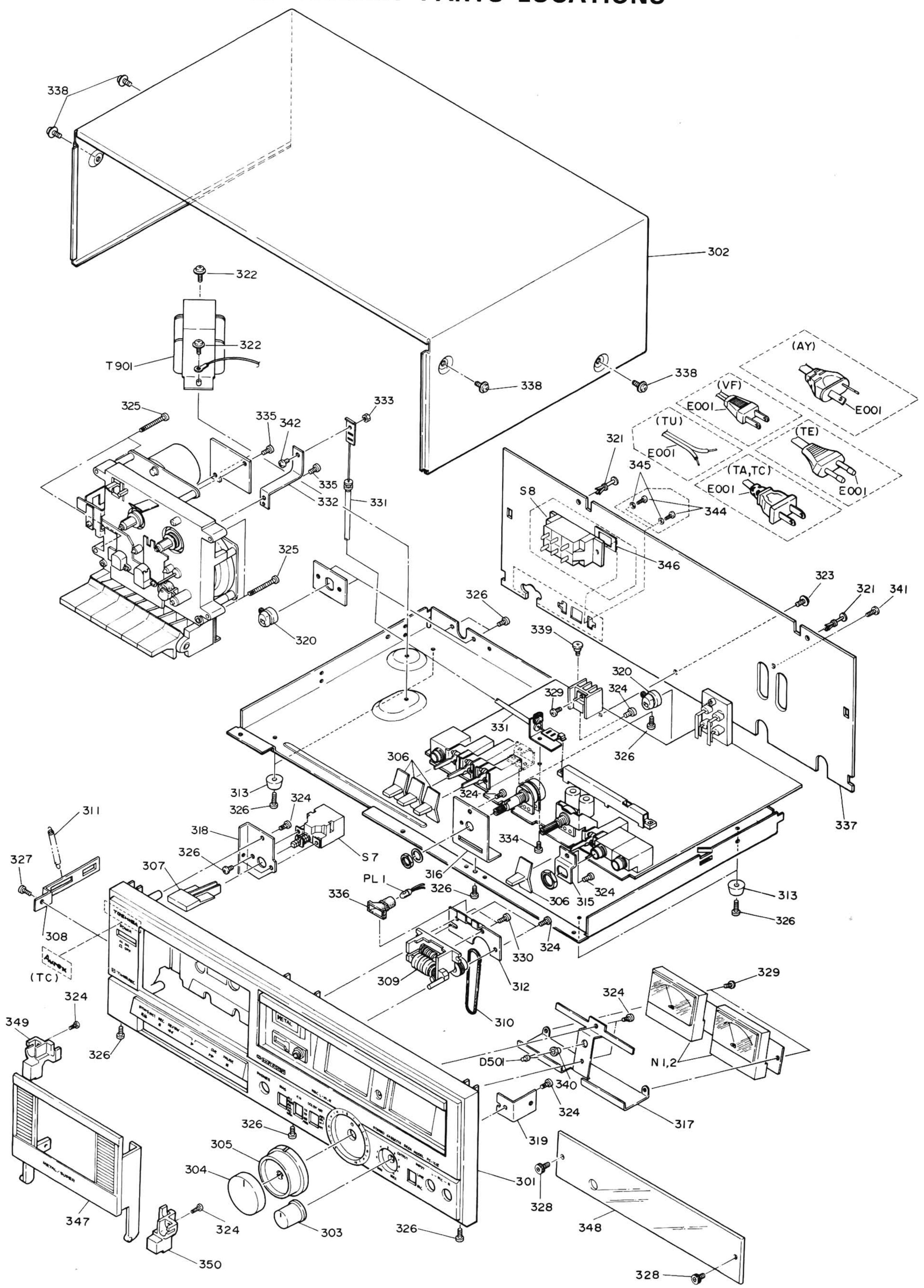

Figure 23.

NOTE: Excluded parts in the Parts List are not available as replacement parts.

10. PARTS LIST

CAUTION: The ⚠ mark, the symbol No. circled with rectangle in the schematic diagram and the shaded area in the parts list designate components which have special characteristics important for safety and should be replaced only with types identical to those in the original circuit or specified in the parts list.

Symbol No.	Part No.	Description
	MECHANICAL PARTS	
1	22217357	Head, Record/Playback (HRPT-77)
2	22218227	Head, Erase (HET-52)
4	25761354	Arm Cushion
5	25764550	Washer, PO, 3.6ø
7	25782374	Lever, Up
8	25741599	Operation Plate, Pause
9	25782173	Lever, Pause Lock
10	25741546	Operation Plate, Record
11	25782248	Lever, Record Lock
13	25764476	Washer, 3ø
15	25756213	Gear, ASO
16	25773437	Spring, ASO Lever
17	25776043	Spring
18	25782247	ASO Lever
20	25782333	Lever, Swing
21	25783195	Bush
22	25754338	Reel Drum (Left)
23	25764549	Washer, 1.7ø
24	25764566	Washer, 2ø
25	25771617	Spring
26	25772578	Spring
27	25773442	Spring, Idler
28	25712367	Reel Drum Ass'y (Right)
29	25756179	Gear, Fast, A
30	25782257	Lever, Rewind
31	25782252	Lever, FF
32	25719491	Gear Ass'y, Fast, B
35	25713505	Idler Ass'y, Rewind
40	25782275	Lever, Record Stop
43	22707546	Screw (BID), 2.6ø x 20mm, Tapping
45	25755441	Belt, Drive
46	25764398	Washer, 2.5ø
47	25717421	Flywheel Ass'y
51	25741545	Operation Plate, Rewind
52	25741787	Operation Plate, Play-C
53	25741757	Operation Plate, Fast-forward
54	25741759	Operation Plate, Stop
56	25771955	Spring, Lock Slider
57	25771956	Spring, Operation Plate C
58	25773484	Spring, Operation Plate A
59	25773369	Spring, Operation Plate B
60	25773405	Spring, Click
63	25725340	Bearing
65	22707301	Screw (BID), 2.6ø x 8mm, Tapping
66	22707429	Screw, Special, 2.6ø x 1.8mm
68	25761238	Cushion, Motor
69	25791152	Motor Ass'y
70	22703280	E Ring, 4ø
72	25761403	Cushion, Button
73	25816601	Lever, Push, STOP/EJECT, REW, PLAY, FF (Silver)
	25816615	Lever, Push, STOP/EJECT, REW, PLAY, FF (Black)
74	25816602	Lever, Push, REC. (Silver)
	25816616	Lever, Push, REC. (Black)
75	25816603	Lever, Push, PAUSE (Silver)
	25816617	Lever, Push, PAUSE (Black)
76	25773420	Spring, Push Lever
82	22707265	Screw (BID), 2ø x 4mm, Tapping
84	22707322	Screw (DTBID), 2ø x 10mm
85	25772585	Spring, Azimuth
86	25773365	Spring, Head Slider
87	25773366	Spring, Pinch Lever
88	25783225	Head Mount Plate
89	25717392	Pinch Lever Ass'y
92	22707322	Screw (DTBID), 2.6ø x 6mm
97	22701472	Screw (FLT), 2.6ø x 1.3mm
101	25776175	Spring
102	25791179	Damper Ass'y
120	25783226	Bush
121	22707461	Screw (BID), 2.6ø x 6mm, Tapping
126	25783211	Bush
	CABINET PARTS	
301	25817810	Panel Ass'y (TE, TU, AY, TA, VF-S)
	25817835	Panel Ass'y (TC-S)
	25817816	Panel Ass'y (TA-B)
	25817836	Panel Ass'y (TC-B)
302	25838259	Top Cover (Silver)
	25838431	Top Cover (Black)
303	22835181	Knob, Outlet (Silver)
	25837447	Knob, Outlet (Black)
304	22835154	Knob, Record (Left)(Silver)
	25837445	Knob, Record (Left)(Black)
305	22835155	Knob, Record (Right)(Silver)
	25837446	Knob, Record (Right)(Black)
306	25837281	Knob, Select (Silver)
	25837427	Knob, Select (Black)
307	25837362	Knob, Push, Power (Silver)

www.hifiengine.com

Symbol No.	Part No.	Description
	22835073	Knob, Push, Power (Black)
308	25758384	Lever, Door
309	25873217	Counter
310	25755377	Belt, Counter
311	25776185	Spring
313	22874027	Leg
⚠ 320	25845528	Bush, Power Cord (TE, TU, AY)
⚠	25845120	Bush, Power Cord (TA, TC, VF)
321	22705026	Rivet, Plastic, 3ø x 6.5mm
322	22707521	Screw (FLDT), 3ø x 6mm
323	22707456	Screw (FLDT), 3ø x 8mm
324	22701326	Screw (BID), 3ø x 8mm, Tapping
325	22701247	Screw (BID), 3ø x 25mm, Tapping
326	22707445	Screw (DTBID), 3ø x 6mm
327	22707323	Screw (BID), 2.6ø x 8mm
328	22707028	Screw, 3ø x 8mm, Special
329	22707452	Screw (BID), 3ø x 5mm
331	25791157	Remote Wire Ass'y
333	25720130	Nut, 2.6ø
334	22707473	Screw (BID), 2.6ø x 6mm, Tapping
335	22707350	Screw (DTBID), 2.6ø x 5mm
336	25841218	Holder, Lamp
337	25838399	Plate, Jack (TE)
	25838400	Plate, Jack (TU, AY)
	25838401	Plate, Jack (VF)
	25838398	Plate, Jack (TA, TC-S)
	25838420	Plate, Jack (TA, TC-B)
338	22707522	Screw (FLDT), 3ø x 6mm
339	22707394	Screw, 3ø x 4mm, Special
341	22707200	Screw (TPAN), 3ø x 10mm
342	22707461	Screw (BID), 2.6ø x 6mm, Tapping
343	22707066	Screw (BID), 3ø x 6mm
344	22707536	Screw (BID), 3ø x 10mm (VF)
345	22703269	Washer, 3ø (VF)
347	25817818	Cassette Cover Ass'y (Silver)
	25817817	Cassette Cover Ass'y (Black)
348	25838261	Cover, Meter
349	25838336	Decoration, Panel (L)(Silver)
	25838435	Decoration, Panel (L)(Black)
350	25838337	Decoration, Panel (R)(Silver)
	25838436	Decoration, Panel (R)(Black)
TRANSISTORS, IC'S AND DIODES		
Q401, 402		Transistor, 2SC2240-GR
Q403, 404		Transistor, 2SC2240-GR
Q405, 406	22114821	IC, μA7300PC

Symbol No.	Part No.	Description
Q407, 408		Transistor, 2SC1815-GR
Q409, 410		IC, TA7140P
Q411, 412, 413, 414, 415, 416		Transistor, 2SC1815-GR
Q501		Transistor, 2SC1815-GR
Q502		Transistor, 2SA1015-Y
Q901		Transistor, 2SC1626-Y
D401, 402, 403, 404	22115603	Diode, 1N60FD1
D501		Diode, TLR226
⚠ D901	22115485	Diode, WL02
D902		Diode, 02Z13A
ELECTRICAL PARTS		
⚠ T901	22223797	Transformer, Power (TE)
⚠	22223798	Transformer, Power (TU, AY)
⚠	22223796	Transformer, Power (TA, TC)
⚠	22223799	Transformer, Power (VF)
L401, 402	22232207	Coil, Trap (2.2mH)
L403, 404	22232203	Coil, Trap (22mH)
S1	22195586	Switch, Slide, Record/Playback
S2	22195361	Switch, Lever, Bias
S3	22195362	Switch, Lever, Equalizer
S4	22195474	Switch, Lever, Dolby
S5	22195512	Switch, Lever, Input
S6	22195465	Switch, Leaf, Muting
⚠ S7	22195295	Switch, Push, Power (TE, TU, AY, VF)
⚠	22195226	Switch, Push, Power (TA, TC)
⚠ S8	22146186	Switch, Slide, Power Select (VF)
Z401, 402	22153116	Filter, Dolby, 85
Z403, 404	22153117	Filter, Dolby, 19
Z501	22132530	Bias OSC Unit
J101	22163782	Jack, Microphone
J102	22163759	Jack, US PIN
J103	22163776	Jack, Headphone
N1, 2	22104534	Meter, Level
	22113506	Lamp, Meter
PL1	22113313	Lamp, 14V/50mA
⚠ E001	22176286	Cord, Power (TE)
⚠	22176536	Cord, Power (TU)
⚠	22176588	Cord, Power (AY)
⚠	22176572	Cord, Power (TA, TC)
⚠	22176125	Cord, Power (VF)
CAPACITORS		
J = ±5%, K = ±10%, M = ±20%, P = –0 +100%, Z = –20 +80%		
C401, 402	22349561	Ceramic, 560pF, 50V, K

www.hifiengine.com

Symbol No.	Part No.	Description
C403, 404	22488109	Electrolytic, 1mfd, 50V, M
C405, 406	22485471	Electrolytic, 470mfd, 16V, M
C407, 408	22349102	Ceramic, 1000pF, 50V, K
C409, 410	22488339	Electrolytic, 3.3mfd, 50V, M
C411, 412	22488100	Electrolytic, 10mfd, 50V, M
C413, 414	22486220	Electrolytic, 22mfd, 25V, M
C415, 416	22371563	Mylar, 0.056mfd, 50V, J
C419, 420	22483221	Electrolytic, 220mfd, 10V, M
C421, 422	22371333	Mylar, 0.033mfd, 50V, J
C423, 424	22486220	Electrolytic, 22mfd, 25V, M
C425, 426	22371472	Mylar, 4700pF, 50V, J
C427, 428	22371332	Mylar, 0.033mfd, 50V, J
C429, 430	22488109	Electrolytic, 1mfd, 50V, M
C431, 432	22480003	Electrolytic, 0.1mfd, 50V, K
C433, 434	22480006	Electrolytic, 0.33mfd, 50V, K
C435, 436, 437, 438, 439, 440, 441, 442	22488100	Electrolytic, 10mfd, 50V, M
C443, 444	22480005	Electrolytic, 0.22mfd, 50V, K
C445, 446	22488109	Electrolytic, 1mfd, 50V, M
C447, 448	22371223	Mylar, 0.022mfd, 50V, J
C449, 450	22372103	Mylar, 0.01mfd, 50V, J
C451, 452	22372223	Mylar, 0.022mfd, 50V, J
C453, 454	22371472	Mylar, 4700pF, 50V, J
C455, 456	22349151	Ceramic, 150pF, 50V, K
C457, 458, 459, 460, 461, 462, 463, 464	22488339	Electrolytic, 3.3mfd, 50V, M
C465, 466	22483470	Electrolytic, 47mfd, 16V, M
C467, 468, 469, 470	22483101	Electrolytic, 100mfd, 10V, M
C471, 472	22349332	Ceramic, 3300pF, 50V, K
C473, 474	22349562	Ceramic, 5600pF, 50V, K
C475, 476	22349101	Ceramic, 100pF, 50V, K
C477, 478, 479, 480	22349562	Ceramic, 5600pF, 50V, K
C481, 482, 483, 484	22349101	Ceramic, 100pF, 50V, K
C502	22488479	Electrolytic, 4.7mfd, 50V, M
C503	22488109	Electrolytic, 1mfd, 50V, M
C504	22485101	Electrolytic, 100mfd, 16V, M
C505	22380101	Polystyrene, 3900pF, 200V, K
C506, 507	22488100	Electrolytic, 10mfd, 50V, M
C508	22342473	Ceramic, 0.047mfd, 50V, Z
⚠ C901	22486102	Electrolytic, 1000mfd, 25V, M
C902	22486471	Electrolytic, 470mfd, 25V, M
C903	22485331	Electrolytic, 330mfd, 16V, M
C904	22485471	Electrolytic, 470mfd, 50V, M
C905	22485331	Electrolytic, 330mfd, 50V, M
⚠ C906	22340147	Ceramic, 0.01mfd, 400V, P (TE, TU, AY, VF)

Symbol No.	Part No.	Description
⚠	22340140	Ceramic, 0.01mfd, 125V, P (TA, TC)

RESISTORS

All resistors are carbon film ¼W, ±5%, unless otherwise noted. K = 1000, M = 1000000

R401, 402	22658494	50K ohm, B, Semi-fixed
R403, 404	22658493	20K ohm, B, Semi-fixed
R405, 406	22658531	5K ohm, B, Semi-fixed
R407, 408	22658496	200K ohm, B, Semi-fixed
R409, 410	22555473	47K ohm
R411, 412	22555103	10K ohm
R413, 414	22555222	2.2K ohm
R415, 416	22555153	15K ohm
R417, 418	22555333	33K ohm
R419, 420	22555681	680 ohm
R421, 422	22555334	330K ohm
R423, 424	22555332	3.3K ohm
R425, 426	22555225	2.2M ohm
R427, 428	22545102	1K ohm
R429, 430	22545331	330 ohm
R431, 432	22555392	3.9K ohm
R433, 434	22555102	1K ohm
R435, 436	22555821	820 ohm
R437, 438	22555222	2.2K ohm
R439, 440	22555563	56K ohm
R443, 444	22555332	3.3K ohm
R445, 446	22555473	47K ohm
R447, 448	22555274	270K ohm
R449, 450	22555682	6.8K ohm
R451, 452	22555274	270K ohm
R453, 454	22555562	5.6K ohm
R455, 456	22555101	100 ohm
R457, 458	22555103	10K ohm
R459, 460	22555101	100 ohm
R461, 462	22555103	10K ohm
R463, 464	22555683	68K ohm
R465, 466	22555153	15K ohm
R467, 468	22555332	3.3K ohm
R469, 470	22545103	10K ohm
R471, 472	22555101	100 ohm
R473, 474	22555473	47K ohm
R475, 476	22545153	15K ohm
R477, 478	22545223	22K ohm
R479, 480	22555103	10K ohm
R481, 482	22555154	150K ohm
R483, 484	22555153	15K ohm
R485, 486	22555222	2.2K ohm
R487, 488	22555101	100 ohm
R489	22545103	10K ohm
R490	22555103	10K ohm
R491, 492	22555152	1.5K ohm

www.hifiengine.com

Symbol No.	Part No.	Description
R493	22545222	2.2K ohm
R494	22555222	2.2K ohm
R495, 496	22555103	10K ohm
R497, 498	22545151	150 ohm
R499, 500	22545103	10K ohm
R501, 502, 503, 504, 505, 506	22555102	1K ohm
R511	22655426	50K ohm, B, Variable
R512	22625427	10K ohm, B, Variable
R513	22545102	1K ohm
R514	22555104	100K ohm
R515	22555103	10K ohm
R516	22555562	5.6K ohm
R517	22555104	100K ohm
R518	22555153	15K ohm
R519	22555473	47K ohm
R520	22547331	330 ohm, ½W
R521	22547681	680 ohm, ½W
R522	22547470	47 ohm, ½W
R523	22545222	2.2K ohm
R524	22555562	5.6K ohm
R525	22555563	56K ohm
R526	22555154	150K ohm
⚠ R901	22570304	56 ohm, 2W, Metal Oxide Film
R902, 903	22547151	150 ohm, ½W
⚠ R904, 905	22500176	22 ohm, Fusible
R906	22570264	150 ohm, 1W, Metal Oxide Film
ACCESSORIES		
	22902684	Owner's Manual (TE)
	22902685	Owner's Manual (TU, AY)
	22902682	Owner's Manual (TA)
	22902683	Owner's Manual (TC)
	22902686	Owner's Manual (VF)
	22164775	Junction Cord
	22990374	Cleaner, Head

www.hifiengine.com

TOSHIBA CORPORATION
2-1, GINZA 5-CHOME, CHUO-KU, TOKYO 104, JAPAN

PRINTED IN JAPAN 22955590 Mar. 1980 Ⓑ

www.hifiengine.com